REACH/IIZEIPX7

REV.	ECN. NO.	APPD.

CAD GENERATED DRAWING. DON'T CHANGE BY HAND.

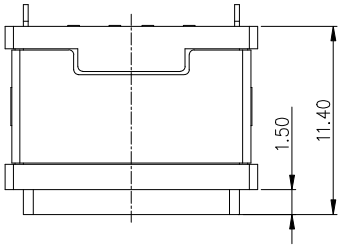

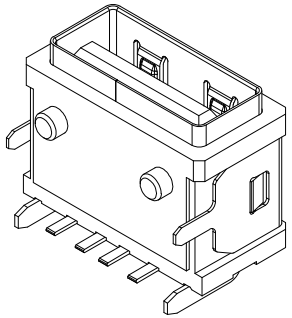

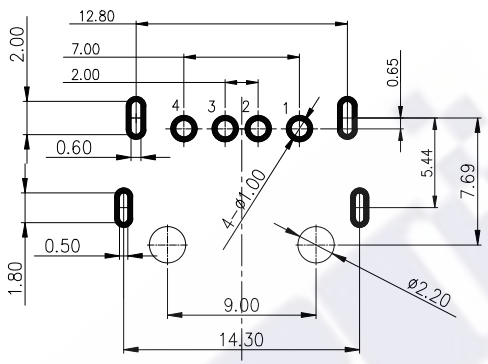

RECOMMENDED PCB LAYOUT(TOP VIEW)

THICKNESS T=1.0mm
DEFAULT TOLERANCE+/-0.05

NOTES:

SPECIFICATION:

1. CURRENT RATING: 3.0A MAX
2. DIELECTRIC WITHSTAND VOLTAGE: 100VAC
3. TEMPERATURE RANGE: -30 ℃ ~ 85 ℃
4. CONTACT RESISTANCE: 40 MILLIONHM MAX
5. INSULATION RESISTANCE: 100 MEGOHMS MIN.
6. INSERTION FORCE : 10N~30N
7. UNMATING FORCE: 8N~30N
8. DURABILITY: 1500 CYCLES

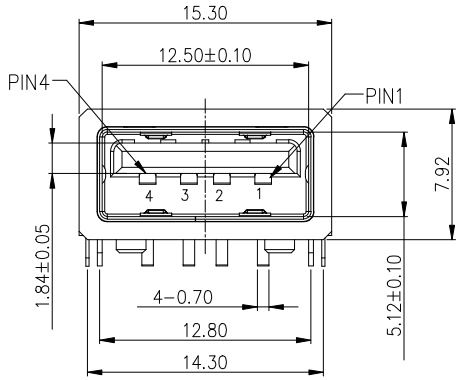

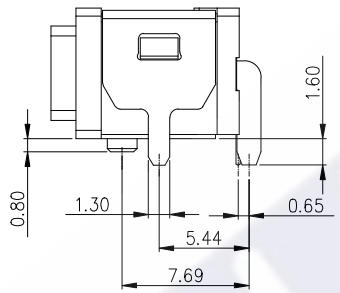

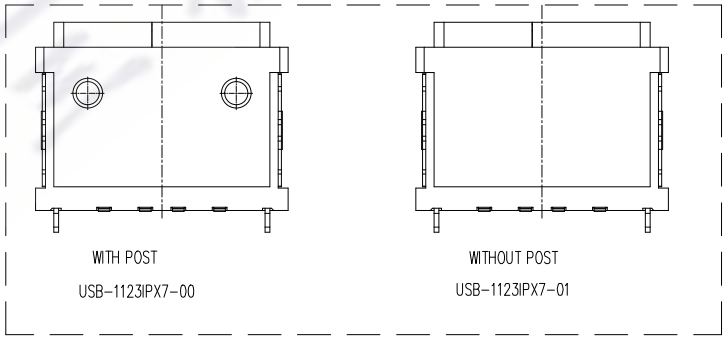

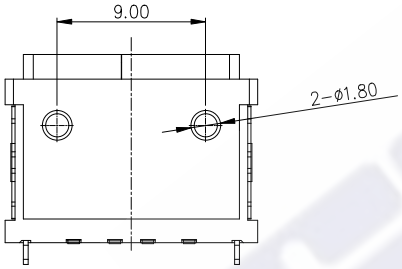

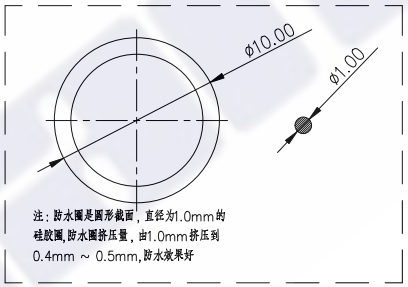

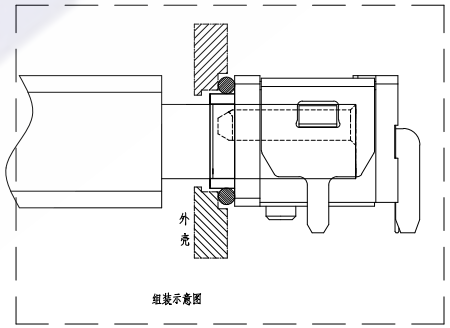

PIN ASSIGNMENT

PIN NO.	1	2	3	4
SINGAL NAME	VBUS	D-	D+	GND

ITEM	PART NAME	Q'TY	FINISH	NOTE
5	Outer Shell	1	SUS 301 1/4H	
4	Inner Shell	1	SUS 301 1/4H	
3	PLASTIC Shell	1	PA10T (G.F30%)	
2	Contact	4	BRASS C2680-EH Au/Ni Plating T=0.25mm	
1	Housing	1	PA10T (G.F30%)	

X. ± 0.50	X.° ± 2°	UNITS mm	三佐部品【中国】股份有限公司
.X ± 0.30	.X° ± 1°	MAT'L	PART NO. MTKHF04WD1ADWNG1N / TITLE: WATERPROFF USB 2.0 A TYPE
.XX ± 0.10	.XX° ± 0.5°	FINISH	APPD: / DWG NO.: MTKHF04WD1ADWNG1N
.XXX ± 0.05		Q'TY	CHKD:
			DR: JANE CHOU 2021/10/20

The copyright belongs to samzo parts [China] Co., Ltd. please use the material after samzo parts agree to authorize. The final right of interpretation belongs to samzo parts.

SCALE	SHEET	REV.
1/1	1/1	A1